REVISIONS				
ZONE	REV.	DESCRIPTION	DATE	APPROVED

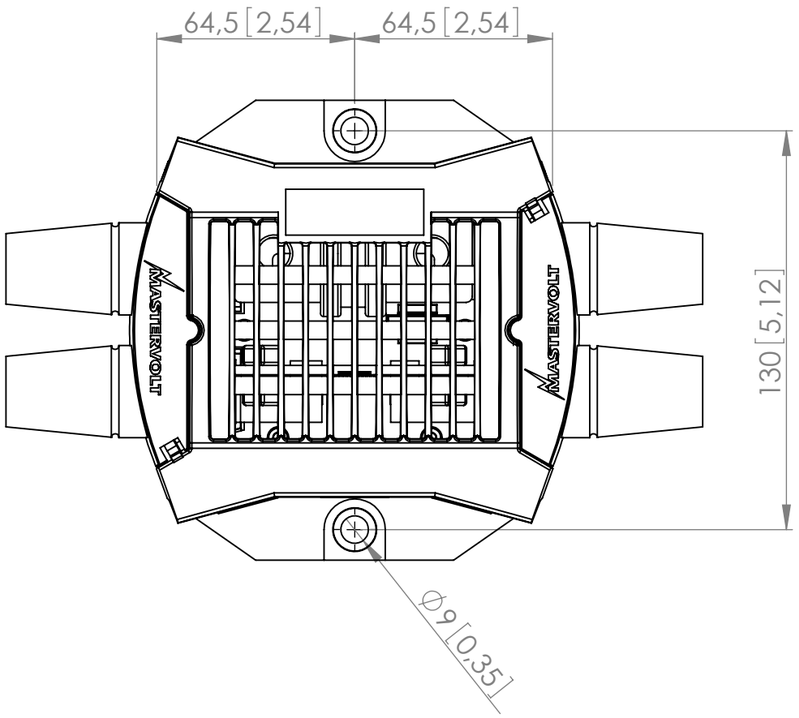

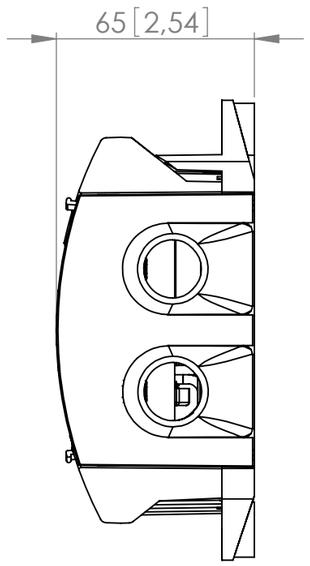

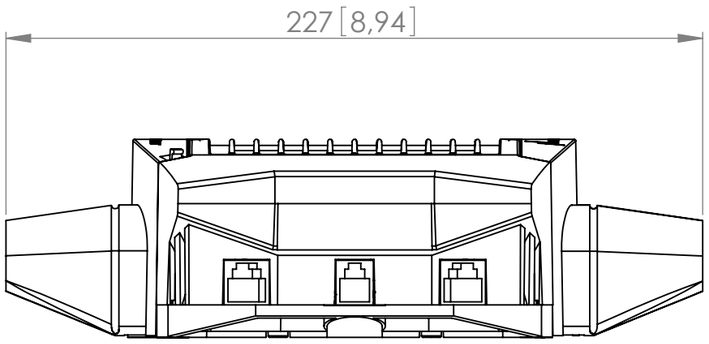

Unless otherwise specified.
Dimensions are in mm
Tolerances:
- Linear: ± 0.2mm
- Angular: ± 0.5°

Finish:

DO NOT SCALE DRAWING

Debur and break sharp edges.

Status:

Revision A1

Title Dimensions MasterShunt

	Name	Signature	Date
Drawn	H. F. Dekker		20080409
Chk'd			
Appr'd			
Mfg			
Q.A			

Material:

Weight:

Dwg. nr.:

Delta Part No.:

Project:

MASTERVOLT

A3

Copyright by Mastervolt BV No part of this drawing may be reproduced or distributed in any form or by any means, or stored in a data base or retrieval system without the prior written permission of Mastervolt.

SCALE:1:2

SHEET 1 OF 1